Technical factsheet

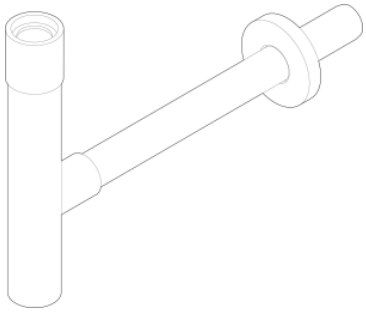

Bottle trap

Spare part

Item Number: 9510430307

Characteristics

Item Number	9510430307
Dimensions	w/h/d 45 mm/296 mm/370 mm
Net weight	0,97 kg
Note	1 1/4” connection thread

Optimal impact on the basin mould with fittings that have a vertical outlet (90 ° angle of impact) and a built-in aerator.

Flow rate chart

Product/tender specifications

Bottle trap

Spare part

Item Number:	9510430307

Text

Bottle trap, w/h/d 45/296/370 mm, chrome-plated, 1 1/4” connection thread

We reserve the right to change designs, product range and technical specifications without prior notice.
More information can be found at: www.alape.com +49 (0) 5321 558-0 info@alape.com